E. NEW BUSINESS

2. Conditional Use Permit; PC Resolution 2023-10
Applicant: Alaska Rail Road Corporation (ARRC)
Location: ARRC MP 26.2, along Lower Trail Lake
Request: Construct a culvert on the Alaska Rail Road ROW within the 50' Habitat Protection District of the Lower Trail Lake
Moose Pass Area

Multi Agency Permit Application

RIVER CENTER

514 Funny River Road, Soldotna, AK 99669 • (907) 714-2460 • KenaiRivCenter@kpb.us

Applicant Information:

Name: Brian Lindamood (ARRC)

Owner? ■ Yes ☐ No

Mailing: P.O. Box 107500
Anchorage, AK 99510

Phone: 907-265-3095

Email: LindamoodB@akrr.com

Agent Information: (if applicable)

Name: Nicholas Havelock (ARRC)

Mailing: P.O. Box 107500
Anchorage, AK 99510

Phone: 907-265-2313

Email: HavelockN@akrr.com

Project Location:

KPB Parcel ID: NA

Subdivision: NA

Physical Address: ARRC MP 26.2
60.443, -149.370

Lot: NA Block: NA Addn/No.: NA

Directions to site: Site is located east of approx. Seward Highway milepost 26.

Waterbody Name: Unnamed Drainage

River Mile: NA Riverbank: (looking downstream) ☐ Right ☐ Left

Permit Fees: (please select the applicable permit fees)

☐ $100 - ADNR State Parks Permit

■ $300 - KPB Conditional Use Permit

■ $50 - KPB Habitat/Floodplain Permit

☐ $300 - KPB Floodway Development Permit

Project Description: ■ New Project **OR** ☐ Extension ☐ Amendment to **RC#** _____

Provide a detailed description of your project and all related activities, use additional pages if needed. Include the following information for all existing and proposed structures:

- **Project location & dimensions**
- **Waterbody description & proximity**
- **Proximity to OHW and/or HTL**
- **Construction methods/equipment**
- **Filling/dredging/excavation**:
  - type, volume, area, location
- **Fuel Storage**: location, quantities
- **Vegetation Removal**: location, amount, type

The Alaska Railroad Corporation (ARRC) proposes a culvert replacement project at rail milepost 26.2. The existing 36" X 39' corrugated metal pipe culvert supporting an unnamed drainage would be replaced with a 36" X 50' smooth steel pipe culvert. Two excavators will operate from the tracks and from a temporary construction pad placed adjacent to the mainline, requiring approx. 87 cubic yards of fill. Approx. 120 cy of ballast and in-situ material will be excavated, material not re-used will be placed in ARRC uplands and outside the floodplain. Necessary damming for water diversion may be required to allow construction activities to be performed in-the-dry. All work will be within the ARRC ROW.

KPB Tax Credit: **(skip this section if your project is prior existing, only applicable to NEW projects)**

Please provide your estimated project cost(s) below. Do not include grants or other funding assistance:

Elevated Light Penetrating Structure(s) $ _____

Bank or Habitat Restoration & Protection $ _____

Other Activities $ _____

Project Questions:

Note: Use Ordinary High Water (OHW) for non-tidal waters, and Mean High Tide (MHT) for tidal waters.

1. Start date: 6/1/23 End date: 10/31/24 Estimated Days of Construction: 3-5
2. Is the project located within 50 feet of OHW or HTL a waterbody? ■ Yes ☐ No
3. Does any portion of the project extend **below** the OHW or HTL of the stream or waterbody? ■ Yes ☐ No
4. Does any portion of the project cantilever or extend **over** the OHW of the waterbody? ■ Yes ☐ No
5. Will anything be placed below OHW or HTL of the waterbody? ■ Yes ☐ No
6. Will material be extracted or dredged from the site? ■ Yes ☐ No
7. Including areas below OHW or HTL, what is the total area (in acres) that will be excavated or dredged?
   Total Area: 0.01 acres Type of Material: In-situ/Ballast
   Location you will depositing fill: Re-used or ARRC ROW uplands outside of floodplain
8. Will any material (including soils, debris, and/or overburden) be used as fill? ■ Yes ☐ No
   Type of material: Existing/Ballast/Riprap Amount: 120 cy max Permanent ■ or Temporary ☐
   Will fill be placed below OHW or HTL: ■ Yes ☐ No
9. List all motorized equipment to be used in this project, including access route to site, any stream or waterbody crossings, and (if applicable) how long equipment will be used below OHW or HTL: Two excavators, remote compactor, and hyrail trucks for access. Equipment used below OHW is limited to excavator buckets for up to 12 hours.
10. Is any portion of the work already complete? ☐ Yes ■ No
    If yes, describe: NA

Signature & Certification:

This application is hereby made requesting permit(s) to authorize the work described in this application form. I certify the information in this application is complete and accurate to the best of my knowledge.

If applying for a tax credit: I certify that I have not begun construction of the project on this the property and that the proposed project will be constructed in a manner consistent with KPB 5.12 Real Property and Personal Property Taxes, KPB 5.14 Habitat Protection Tax Credit, and other applicable ordinances.

Applicant Signature (required) 5/3/23 **Date**

Agent Signature (if applicable) 5/3/23 **Date**

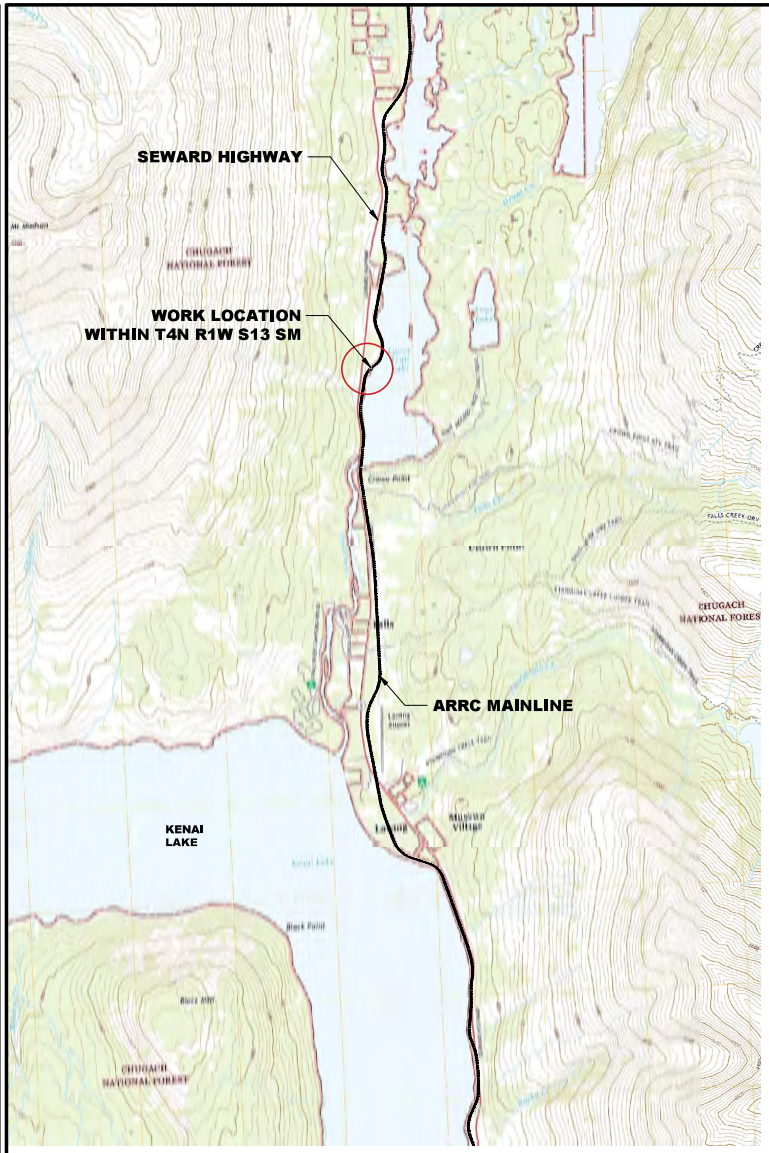

A 1 **SITE LOCATION**
SCALE: 1" = 2000'

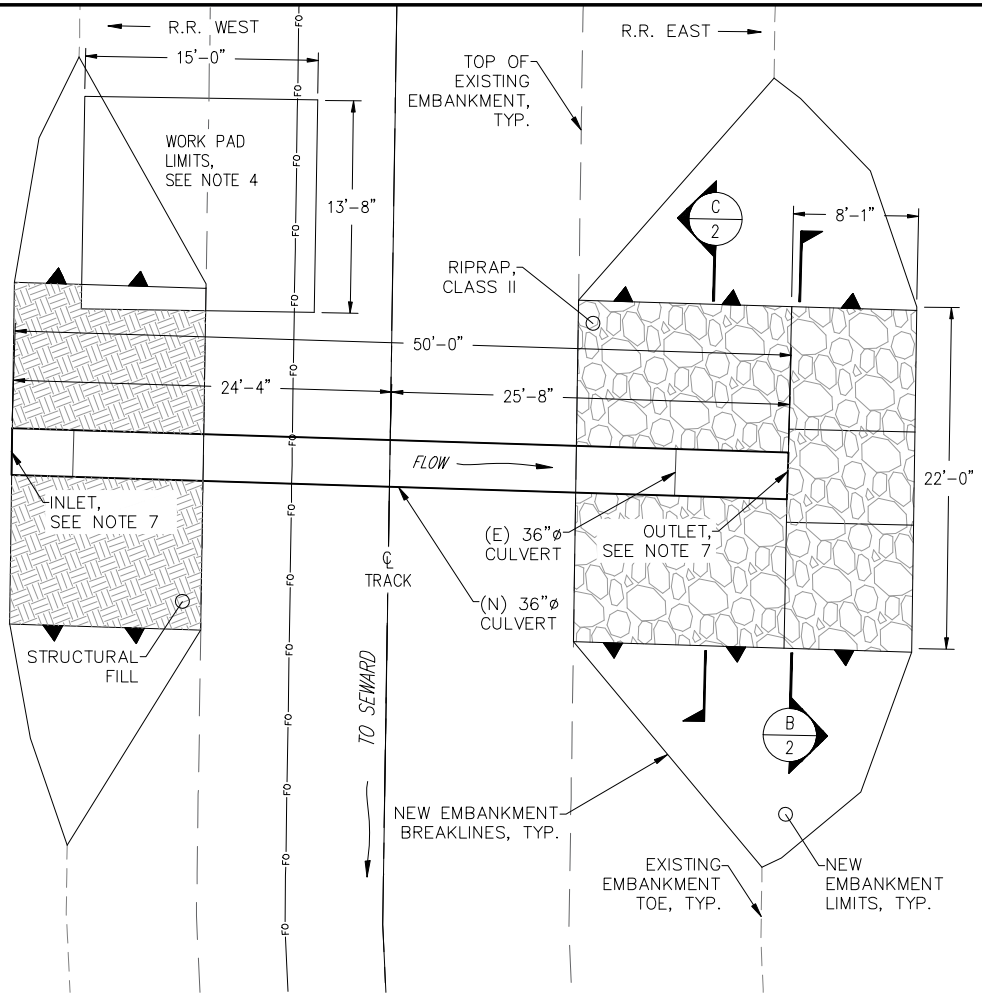

B 1 **MP 26.2 CULVERT PLAN**
SCALE: NTS

NOTES:
1. LIDAR DATA UNAVAILABLE.
2. TEMPORARY WORK PAD DIMENSIONS BASED ON CAT 345 L DIMENSIONS (14.31 FT X 11.46 FT.)
3. TEMPORARY WORK PAD FILL VOLUME APPROXIMATELY 87 CU.YD.
4. RE-ESTABLISH FLOWLINE OF DITCH AFTER REMOVAL OF TEMPORARY WORK PAD.
5. FIELD FIT AND TAPER NEW EMBANKMENT INTO EXISTING EMBANKMENT.
6. MATERIAL IN TAPER TO CONSIST OF EITHER IN-SITU MATERIAL OR RIPRAP, CLASS II.
7. WATER WILL BE PUMPED FROM INLET SIDE TO OUTLET SIDE DURING CONSTRUCTION.

DESIGNED BY:	BSI
CHECKED BY:	BLG
DRAFTED BY:	BSI

ALASKA RAILROAD CORPORATION
PO BOX 107500, ANCHORAGE, AK 99510-7500
327 W SHIP CREEK AVE
ANCHORAGE, AK 99501
(907) 265-2300

KEY MAP

A/E FIRM

ALASKA RAILROAD

ENGINEERING DEPARTMENT
P.O. BOX 107500
ANCHORAGE, ALASKA 99510-7500

PROJECT: 2023 CULVERT REPLACEMENT

SHEET TITLE: CULVERT MP 26.2 PLAN

AFE NO. XXXXX
YEAR 2023
SHEET 01 OF 02

DRAWING LOCATION
P:\ENGINEERING\CULVERTS\CU 26.2\CULVERT 26.2 REPLACEMENT.DWG

DATE 5/2/2023 TIME 4:36 PM | SCALE AS NOTED | PUBLISHED CTB ----

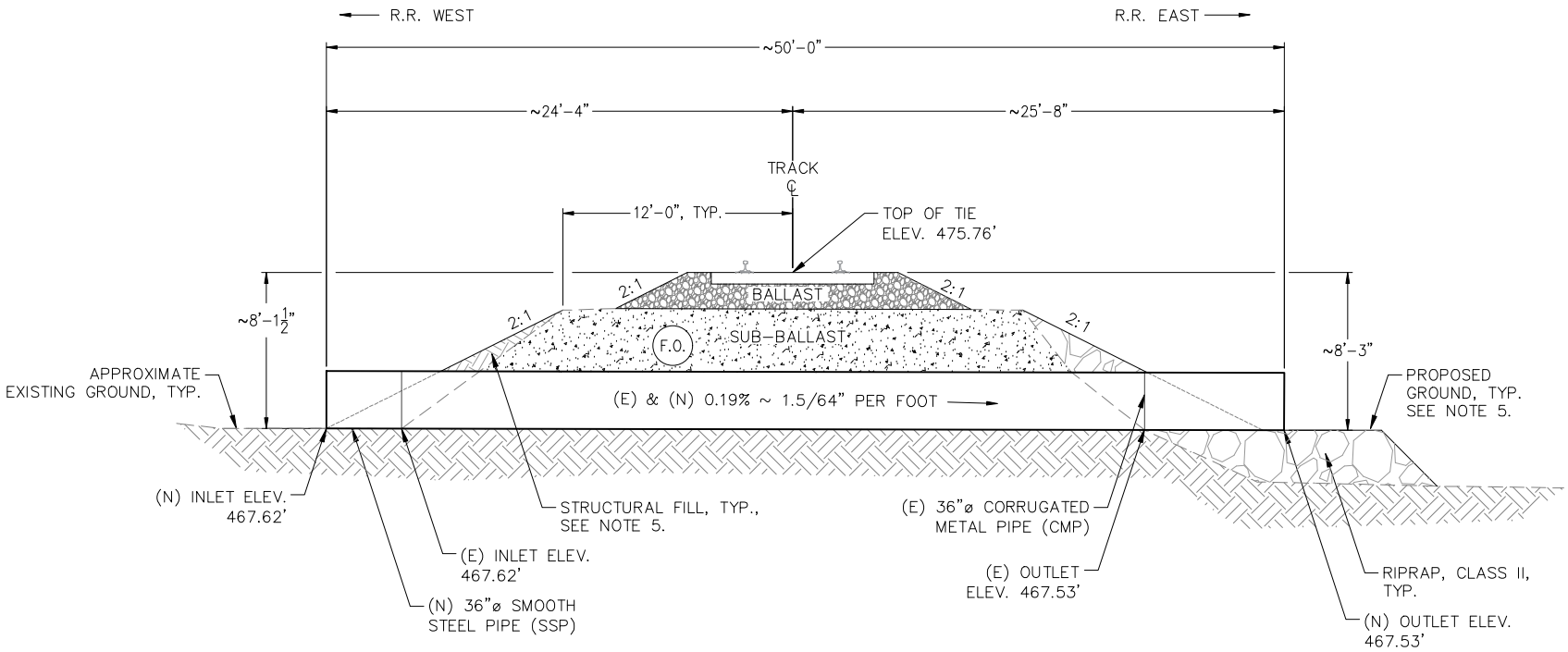

A/2 **MP 26.2 CENTERLINE OF CULVERT SECTION**
SCALE: NOT TO SCALE

NOTES:
1. (N) = NEW CONSTRUCTION.
   (E) = EXISTING CONSTRUCTION.
   (F.O.) = APPROXIMATE LOCATION OF FIBER OPTIC.
2. INLET MAY BE FIELD ADJUSTED TO MATCH THE FLOWLINE OF THE DITCH.
3. FIELD VERIFY LOCATION (OFFSET AND DEPTH) OF F.O. UTILITIES AND ADD NOTE ON RECORD DRAWINGS. ASSUMED TO BE 2' FROM EDGE OF TIE AND 4' BELOW TOP OF TIE.
4. UTILITY OWNER MAY NEED TO BE PRESENT DUE TO POTENTIAL CONFLICT.
5. BENCH EXISTING EMBANKMENT PRIOR TO PLACEMENT OF NEW FILL, WHERE PRACTICABLE.
6. WATER WILL BE PUMPED FROM INLET SIDE TO OUTLET SIDE DURING CONSTRUCTION.

WORK SCHEDULE:
1. DEMOLISH 36"ø CORRUGATED METAL PIPE (CMP) 39 L.F.
2. INSTALL NEW 36"ø SMOOTH STEEL PIPE (SSP) 50 L.F.

MATERIAL QUANTITY ESTIMATE

MATERIAL TYPE	QUANTITY ESTIMATE	PERMIT MAXIMUM
SUB-BALLAST	8 CY	12 CY
STRUCTURAL FILL	25 CY	40 CY
RIPRAP	45 CY	68 CY
TOTAL FILL	78 CY	120 CY

* MATERIAL QUANTITIES ARE ESTIMATED USING NEAT LINES AND APPROXIMATE GRADES SHOWN ON THIS DRAWING. NO CONTINGENT VOLUME OF MATERIAL IS ADDED TO ACCOUNT FOR SETTLEMENT, COMPACTION, WASTE, OR CHANGED SITE CONDITIONS.

alaska811 DIGLINE INC

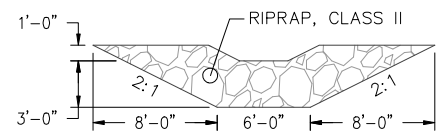

B/2 **SECTION B-B**
SCALE: 1/2" = 1'-0"

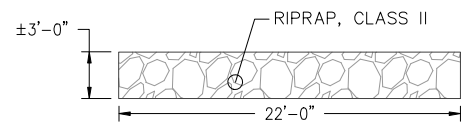

C/2 **SECTION C-C**
SCALE: 1/2" = 1'-0"

DESIGNED BY:	BSI
CHECKED BY:	BLG
DRAFTED BY:	BSI

ALASKA RAILROAD CORPORATION
PO BOX 107500, ANCHORAGE, AK 99510-7500
327 W SHIP CREEK AVE
ANCHORAGE, AK 99501
(907) 265-2300

KEY MAP

A/E FIRM

ENGINEERING DEPARTMENT
P.O. BOX 107500
ANCHORAGE, ALASKA 99510-7500

ALASKA RAILROAD

PROJECT: 2023 CULVERT REPLACEMENT

SHEET TITLE: CULVERT MP 26.2 SECTION

AFE NO. XXXXX
YEAR 2023
SHEET 02 OF 02

DRAWING LOCATION
P:\ENGINEERING\CULVERTS\CU 26.2\CULVERT 26.2 REPLACEMENT.DWG

DATE 5/2/2023 TIME 4:32 PM | SCALE AS NOTED | PUBLISHED CTB

ARRC – MP 26.2 Culvert Replacement
Site Photographs – October 2022

Photo 1. Culvert 26.2 inlet

Photo 2. Culvert 26.2 outlet

Kenai Peninsula Borough Planning Department

Project Overview and Vicinity Map

Thursday, May 4, 2023

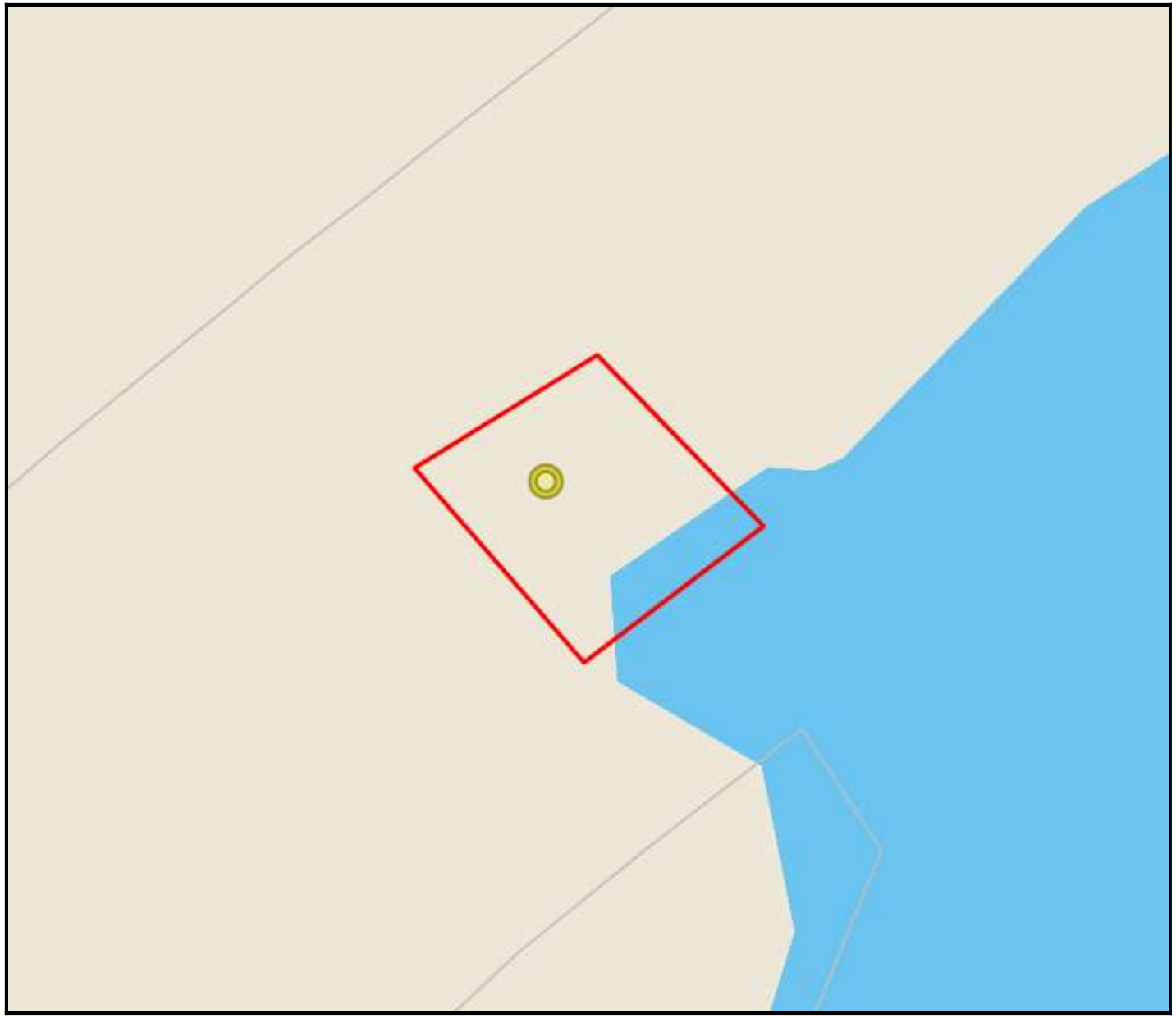

0 50 100 ft

Alaska Railroad Corporation

Project Area

replacement of culvert and additon of fill to stabilize within the 50 foot anadromous streams habitat protection district setback of Lower Trail Lake

Vicinity

Map created by Aldridge, Morgan

The information depicted hereon is for a graphical representation only of best available sources. The Kenai Peninsula Borough assumes no responsibility for any errors on this map.

Kenai Peninsula Borough Planning Department

Wetlands Map

Alaska Railroad Corporation

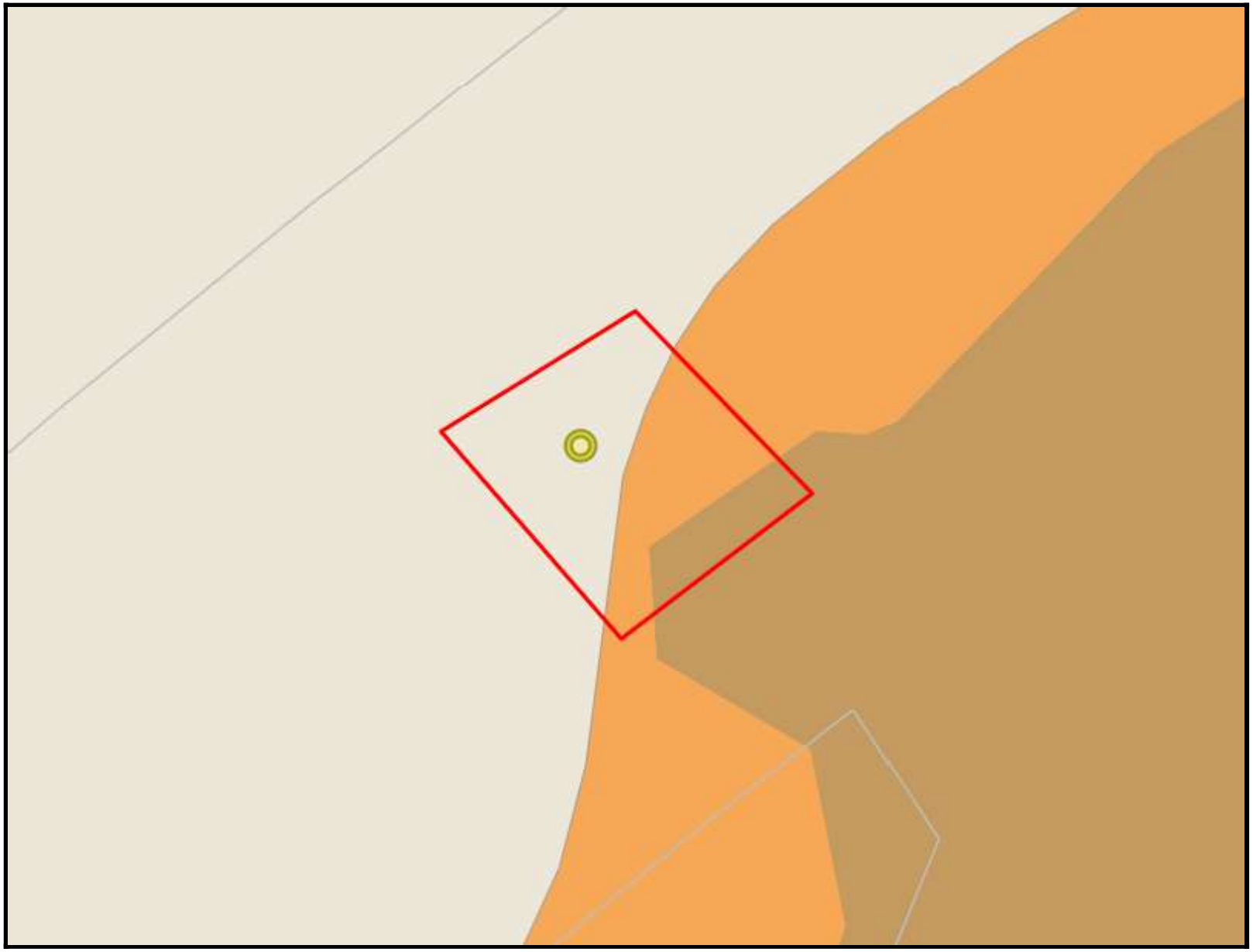

Project Area

Tax Parcels

Landcover Features

KWF Wetlands Assessment

- DISTURB
- Depression
- Discharge Slope
- Drainageway
- Floating Island
- Headwater Fen
- Kettle
- LAKE
- Lakebed
- Late Snow Plateau
- Riverine
- Tidal
- Wetland / Upland Complex

Map created by Aldridge, Morga

Thursday, May 4, 2023

0 35 70 ft

The information depicted hereon is for a graphical representation only of best available sources. The Kenai Peninsula Borough assumes no responsibility for any errors on this map.

Kenai Peninsula Borough Planning Department

Habitat Protection Area Map

Alaska Railroad Corporation

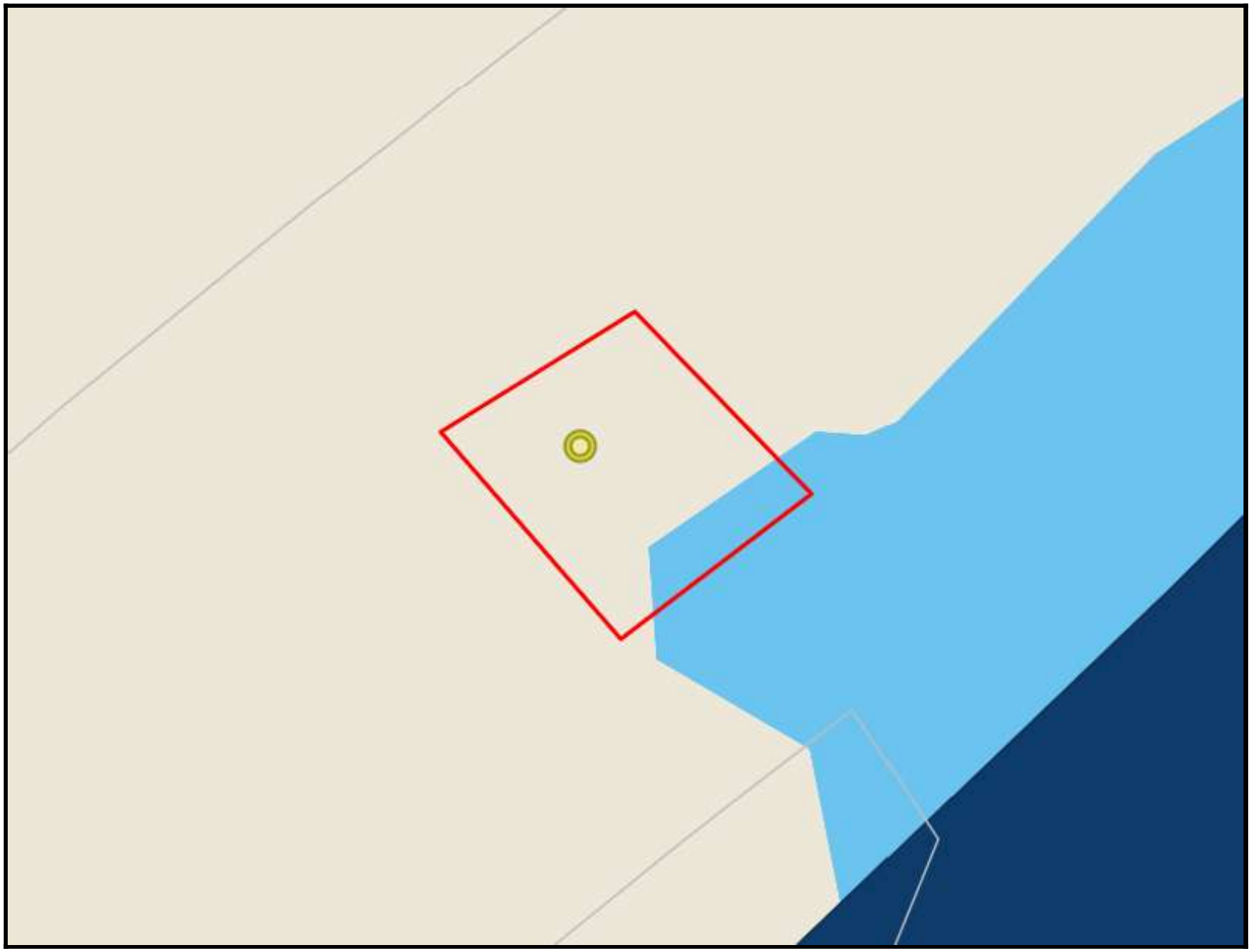

Project Area

Tax Parcels

Habitat

KPB 2118 - KPB 2118 Anadromous Streams

- Exempt
- Managed
- Unregulated
- others

KPB 2118 - KPB 2118 Anadromous Lakes and Areas

- Exempt
- Managed
- Unregulated
- n/a

Map created by Aldridge, Morga

Thursday, May 4, 2023

0 35 70 ft

The information depicted hereon is for a graphical representation only of best available sources. The Kenai Peninsula Borough assumes no responsibility for any errors on this map.

Kenai Peninsula Borough Planning Department

Regulatory Map

Alaska Railroad Corporation

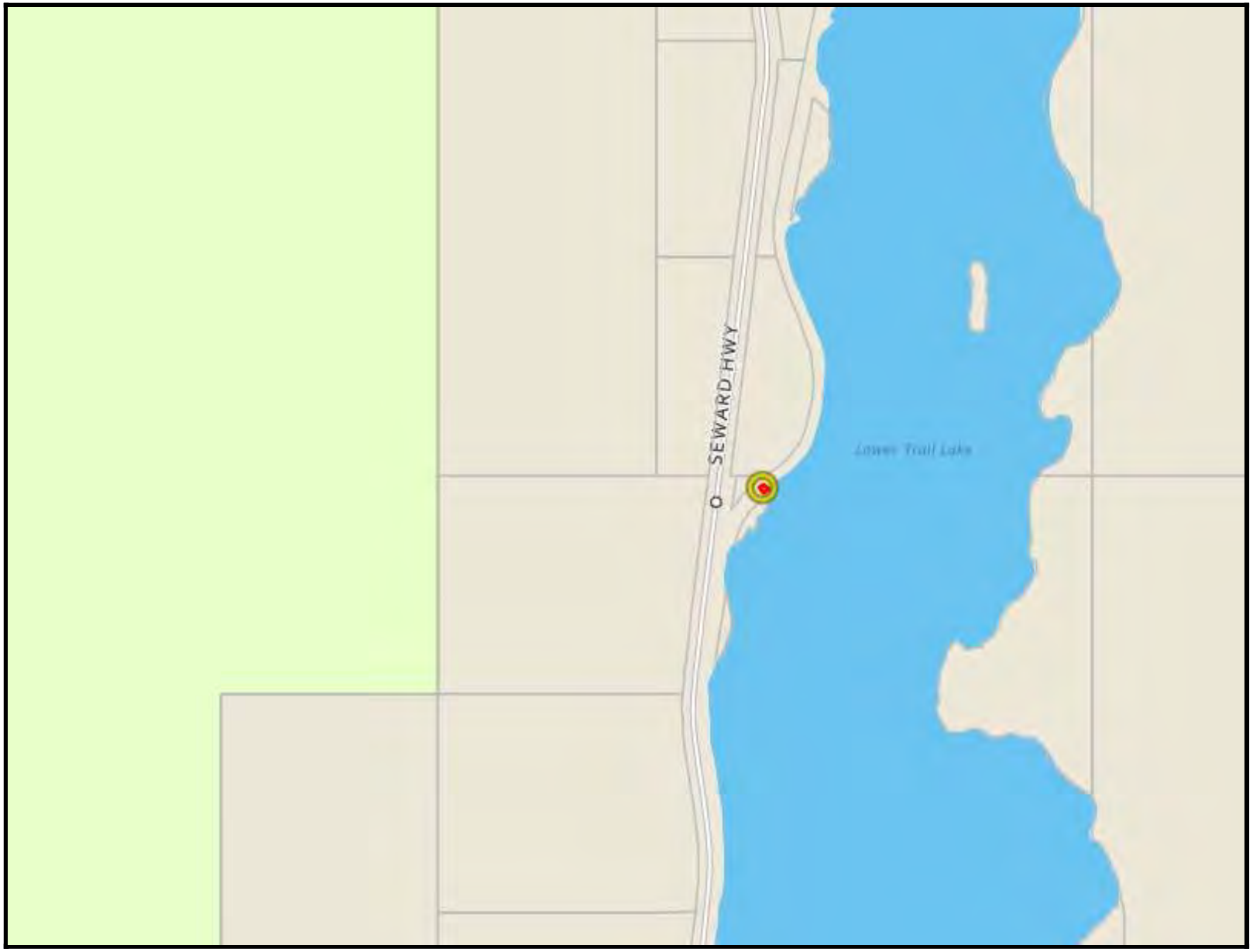

Project Area

Tax Parcels

Map created by Aldridge, Morga

Thursday, May 4, 2023

0 1500 3000 ft

The information depicted hereon is for a graphical representation only of best available sources. The Kenai Peninsula Borough assumes no responsibility for any errors on this map.

Kenai Peninsula Borough Planning Department

Imagery Map

Alaska Railroad Corporation

Project Area

Tax Parcels

Map created by Aldridge, Morga

Thursday, May 4, 2023

0 35 70 ft

The information depicted hereon is for a graphical representation only of best available sources. The Kenai Peninsula Borough assumes no responsibility for any errors on this map.

Kenai Peninsula Borough Planning Department

Imagery Map

Alaska Railroad Corporation

Project Area

Tax Parcels

Map created by Aldridge, Morga

Thursday, May 4, 2023

0 1500 3000 ft

The information depicted hereon is for a graphical representation only of best available sources. The Kenai Peninsula Borough assumes no responsibility for any errors on this map.

Conditional Use Permit
Anadromous Waters Habitat Protection District
Staff Report

KPB File No.	**2023-10**
Planning Commission Meeting:	**May 22, 2023**
Applicant	**Alaska Railroad Corporation**
Mailing Address	**PO Box 107500**
	Anchorage, AK 99510
Physical Address	**ARRC MP 26.2** **60.443917, -149.370399**

Project Description

A Conditional Use Permit is sought pursuant to KPB 21.18 for the construction of a culvert and placement of fill within the 50-foot Habitat Protection District of the Lower Trail Lake, as established in KPB 21.18.040.

Background Information

The existing culvert under the rail road in this area is old and has deteriorated due to age and environmental stress. The photo in the attached application shows that the culvert is in need of repair. The Alaska Railroad proposes to replace the culvert and backfill around the culvert with large rock, creating a hold for the culvert and tapering the rock below.

Project Details within the 50-foot Habitat Protection District

1. Replacing the existing 36x39 corrugated metal pipe culvert at the rail road crossing with a 36x50 smooth steel pipe culvert
2. Placement of approximately 48 cubic yards of new materials (a combination of rip rap, ballast and structural fill) above OHW
3. Placement of approximately 40 cubic yards of materials that will be re-used above OHW

General Standards

Pursuant to 21.18.081(D) General Standards, the following standards shall be met before conditional use approval may be granted:

1. The use or structure will not cause significant erosion, sedimentation, damage within the habitat protection district, an increase in ground or surface water pollution, and damage to riparian wetlands and riparian ecosystems; **Conditions 1-3 appear to support this standard.**
2. Granting of the conditional use shall be consistent with the purposes of this chapter, the borough comprehensive plan, other applicable chapters of the borough Code, and other applicable planning documents adopted by the borough; **Findings 1-4, 8-15 appear to support this standard.**
3. The development of the use or structure shall not physically damage the adjoining property; **Finding 8 appears to support this standard.**
4. The proposed use or structure is water-dependent; **Findings 4 and 9 appear to support this standard.**

5. Applicant's or owner's compliance with other borough permits and ordinance requirements; **Finding 15 appears to support this standard.**

Findings of fact pursuant to KPB 21.18.081 Conditional Use Permit

1. Portions of this proposed project are within the 50-foot habitat protection district as defined by KPB 21.18.040.
2. Pursuant to KPB 21.18.081(B)(5), construction of critical transportation and utility infrastructure may be approved as a conditional structure/use within the habitat protection district.
3. Pursuant to 21.18.081(D) General Standards, staff finds that the proposed project meets the five general standards.
4. Pursuant to KPB 21.18.020(A), this chapter was established to protect and preserve the stability of anadromous fish through controlling shoreline alterations and disturbances along anadromous waters and to preserve nearshore habitat.
5. Pursuant to KPB 21.18.20(B)(5), one purpose of this chapter was established to separate conflicting land uses.
6. Removal of the old culvert and replacing it with a culvert that will provide better drainage.
7. Placement of rip rap fill will support the new culvert and establish a safer railway.
8. Pursuant to KPB 21.06.081(D)(3), the proposed work will occur on the applicant's property and shall not have an adverse effect on adjoining properties.
9. Kenai Peninsula Borough Planning Commission Resolution 2015-35 defines water-dependent as:

   "…a use or structure located on, in or adjacent to water areas because the use requires access to the waterbody. The definition is applicable to facilities or activities that must be located at or near the shoreline and within the 50-foot buffer. An activity is considered water dependent if it is dependent on the water as part of the intrinsic nature of its operation. Examples of water dependent facilities may include, but are not limited to, piers, boat ramps, and elevated walkways."
10. The River Center found the application complete and scheduled a public hearing for May 22, 2023.
11. Agency review was distributed on May 8, 2023. No comments or objections have been received from resource agencies to date.
12. Notice of this project was sent to the Moose Pass Advisory Planning Commission. The APC reviewed this project at their May 4, 2023 meeting. They recommended approval.
13. Pursuant to KPB 21.11.030, public notice was mailed to all property owners within a radius of 300 feet of the project on May 8, 2023. A total of 1 mailing was sent. No comments have been received.
14. Pursuant to KPB 21.11.020, public notice was published in the Peninsula Clarion on May 11, 2023 and May 18, 2023.
15. The applicant is currently in compliance with Borough permits and ordinances.

Permit Conditions

1. Construction techniques and best management practices shall be utilized to ensure that land disturbing activities do not result in runoff or sedimentation to the Trail Lake.
2. The bridge must be designed and installed to meet KPB floodplain requirements.
3. The permittee shall minimize damage to all vegetation and shall revegetate all disturbed areas with native vegetation.
4. For each tree removed, two seedlings less than 5.5-feet tall of a species native to the region will be planted within the 50-foot HPD.
5. Storage or use of fuel is prohibited within 50-feet of any open water.
6. The River Center shall be notified at least 3 days prior to the start of the project.

7. If changes to the approved project described above are proposed prior to or during its siting, construction, or operation, the permittee is required to notify the River Center to determine if additional approval is required.
8. The permittee shall be held responsible for the actions of the contractors, agents, or others who perform work to accomplish the approved plan.
9. The construction or installation phase of this Conditional Use Permit must be completed within three calendar years from the date of the permit's issuance, or the Conditional Use Permit shall expire unless the Planning Commission finds that more time is necessary to effectuate the purposes of this chapter, in which case the commission may extend the deadline for a maximum of six years from the date of issuance. Prior to its expiration date and upon written request, the Planning Director may grant a Conditional Use Permit extension for 12 months (KPB 21.18.081 (H)).
10. In addition to the penalties provided by KPB 21.18.110, and pursuant to KPB 21.50, the permit may be revoked if the permittee fails to comply with the provisions of this chapter or the terms and conditions of a permit issued under this chapter. The Borough Clerk shall provide at least 15 day's written notice to the permittee of a revocation hearing before the hearing officer (KPB 21.18.082).
11. The permittee shall comply with the terms, conditions and requirements of the Kenai Peninsula Borough Code of Ordinances Chapter 21.18, and any regulations adopted pursuant to this chapter.
12. The permittee is responsible for abiding by all other federal, state, and local laws, regulations, and permitting requirements applicable to the project (KPB 21.18.081 (G)).

Attachments

Multi-Agency Application
Draft Resolution 2023-10

Recommendation

Based on the findings, staff finds that the proposed project meets the five general standards of KPB 21.18.081. The Planning Commission could consider additional permit conditions to mitigate for any habitat loss if it chooses.

Staff recommends the Planning Commission grant a Conditional Use Permit for the proposed project details subject to adopted conditions as set forth in 2022-41.

Note: An appeal of a decision of the Planning Commission may be filed to the Hearing Officer, in accordance with the requirements of the Kenai Peninsula Borough Code of Ordinances, Chapter 21.20.250. An appeal must be filed with the Borough Clerk within 15 days of date of the notice of the decision using the proper forms and be accompanied by the filing and records preparation fee.

END OF STAFF REPORT

Donald E. Gilman River Center
514 Funny River Road, Soldotna, Alaska 99669 • (907) 714-2460 • (907) 260-5992 Fax
A Division of the Planning Department
Peter A. Micciche
Borough Mayor

KENAI PENINSULA BOROUGH PLANNING COMMISSION
NOTICE OF PUBLIC HEARING

Public notice is hereby given that an application for a Conditional Use Permit has been received to construct a culvert on the Alaska Rail Road right of way within the 50-foot Habitat Protection District of the Lower Trail Lake near Moose Pass, Alaska. ***You have been sent this notice because you are a property owner within 300 feet of the described property.***

Pursuant to KPB 21.18.081(B)(5) Transportation and utility infrastructure and KPB 21.18.091 Mitigation measures, projects within the 50-foot Habitat Protection District are not permitted unless a Conditional Use Permit (CUP) is approved by the Planning Commission. This project is located at ARRC MP 26.2, along the Lower Trail Lake, near Moose Pass, Alaska.

Petitioner: **Alaska Rail Road Corporation**
PO Box 107500
Anchorage, AK 99510

Public Hearing: The Kenai Peninsula Borough Planning Commission meeting will hold a public hearing on May 22, 2023 commencing at 7:30 p.m., or as soon thereafter as business permits. The meeting is to be held in the Borough Administrative Building, 144 N. Binkley St., Soldotna, Alaska. The public may also attend the meeting electronically/telephonically via Zoom. To join the meeting from a computer visit https://us06web.zoom.us/j/9077142200. To attend the Zoom meeting by telephone call toll free **1-888-788-0099 or 1-877-853-5247**. When calling in you will need the Meeting ID **907 714 2200**.

Public Comment: Anyone wishing to testify may attend the above meeting to give testimony, or may submit written comment via the methods below. **Written comments must be submitted by 1:00 pm Friday, May 19, 2023.**

Mail comments to:	Fax comments to:	Email comments to:
Donald E. Gilman River Center 514 Funny River Road Soldotna, Alaska 99669	(907) 260-5992	planning@kpb.us KenaiRivCenter@kpb.us

For additional information contact Morgan Aldridge, maldridge@kpb.us, Donald E. Gilman River Center, (907) 714-2465.

KENAI PENINSULA BOROUGH PLANNING COMMISSION

RESOLUTION 2023-10

A RESOLUTION GRANTING A CONDITIONAL USE PERMIT PURSUANT TO KPB 21.18 FOR THE CONSTRUCTION OF A CULVERT WITHIN THE 50-FOOT HABITAT PROTECTION DISTRICT OF THE LOWER TRAIL LAKE.

WHEREAS, Chapter 21.18 provides for the approval of Conditional Use Permits for certain activities within the habitat protection district; and

WHEREAS, KPB 21.18.081 provides that a conditional use permit is required for construction not meeting the standards of KPB 21.18.071; and

WHEREAS, KPB 21.18.091 provides for mitigation measures by the planning department staff to address impacts to the Habitat Protection District from a proposed, ongoing, or completed project; and

WHEREAS, public notice was sent to all property owners within a 300-foot radius of the proposed activity as provided in Section 21.11.030; and

WHEREAS, public notice was published in the Peninsula Clarion on May 11, 2023 and May 18, 2023 as provided in Section 21.11.020; and

WHEREAS, public testimony was received at the May 22, 2023 meeting of the Kenai Peninsula Borough Planning Commission;

NOW, THEREFORE, BE IT RESOLVED BY THE PLANNING COMMISSION OF THE KENAI PENINSULA BOROUGH:

That the Planning Commission makes the following findings of fact pursuant to KPB 21.18:

Section 1. Project Details Within the 50-foot Habitat Protection District

1. Replacing the existing 36x39 corrugated metal pipe culvert at the rail road crossing with a 36x50 smooth steel pipe culvert
2. Placement of approximately 48 cubic yards of new materials (a combination of rip rap, ballast and structural fill) above OHW
3. Placement of appropriately 40 cubic yards of materials that will be re-used above OHW
4.

Section 2. Findings of fact pursuant to KPB 21.18.081

1. Portions of this proposed project are within the 50-foot habitat protection district as defined by KPB 21.18.040.
2. Pursuant to KPB 21.18.081(B)(5) Transportation and utility infrastructure, construction of a culvert may be approved as a conditional structure/use within the habitat protection district.
3. Pursuant to 21.18.081(D) General Standards, staff finds that the proposed project meets the five general standards.

4. Pursuant to KPB 21.18.020(A), this chapter was established to protect and preserve the stability of anadromous fish through controlling shoreline alterations and disturbances along anadromous waters and to preserve nearshore habitat.
5. Pursuant to KPB 21.18.20(B)(5), one purpose of this chapter was established to separate conflicting land uses.
6. Removal of old culvert and replace it with a culvert that will provide better drainage.
7. Placement of rip rap fill will support the new culvert and establish a safer railway.
8. Pursuant to KPB 21.06.081(D)(3), the proposed work will occur on the applicant's property and shall not have an adverse effect on adjoining properties.
9. Kenai Peninsula Borough Planning Commission Resolution 2015-35 defines water-dependent as:

   "…a use or structure located on, in or adjacent to water areas because the use requires access to the waterbody. The definition is applicable to facilities or activities that must be located at or near the shoreline and within the 50-foot buffer. An activity is considered water dependent if it is dependent on the water as part of the intrinsic nature of its operation. Examples of water dependent facilities may include, but are not limited to, piers, boat ramps, and elevated walkways."
10. The River Center found the application complete and scheduled a public hearing for May 22, 2023.
11. Agency review was distributed on May 8, 2023 No comments or objections have been received from resource agencies to date.
12. Notice of this project was sent to the Moose Pass Advisory Planning Commission. The APC reviewed this project at their May 4, 2023 meeting. They recommended approval.
13. Pursuant to KPB 21.11.030, public notice was mailed to all property owners within a radius of 300 feet of the project on May 8, 2023. A total of 1 mailing was sent. No comments have been received.
14. Pursuant to KPB 21.11.020, public notice was published in the Peninsula Clarion on May 11, 2023 and May 18, 2023.
15. The applicant is currently in compliance with Borough permits and ordinances.

Section 3. Permit Conditions

1. Construction techniques and best management practices shall be utilized to ensure that land disturbing activities do not result in runoff or sedimentation to the Lower Trail Lake.
2. The culvert must be designed and installed to meet KPB floodplain requirements.
3. The permittee shall minimize damage to all vegetation and shall revegetate all disturbed areas with native vegetation.
4. For each tree removed, two seedlings less than 5.5-feet tall of a species native to the region will be planted within the 50-foot HPD.
5. Storage or use of fuel is prohibited within 50-feet of any open water.
6. The River Center shall be notified at least 3 days prior to the start of the project.
7. If changes to the approved project described above are proposed prior to or during its siting, construction, or operation, the permittee is required to notify the River Center to determine if additional approval is required.
8. The permittee shall be held responsible for the actions of the contractors, agents, or others who perform work to accomplish the approved plan.
9. The construction or installation phase of this Conditional Use Permit must be completed within one calendar year from the date of the permit's issuance, or the Conditional Use Permit shall

expire unless the Planning Commission finds that more time is necessary to effectuate the purposes of this chapter, in which case the commission may extend the deadline for a maximum of six years from the date of issuance. Prior to its expiration date and upon written request, the Planning Director may grant a Conditional Use Permit extension for 12 months (KPB 21.18.081 (H)).

10. In addition to the penalties provided by KPB 21.18.110, and pursuant to KPB 21.50, the permit may be revoked if the permittee fails to comply with the provisions of this chapter or the terms and conditions of a permit issued under this chapter. The Borough Clerk shall provide at least 15 day's written notice to the permittee of a revocation hearing before the hearing officer (KPB 21.18.082).
11. The permittee shall comply with the terms, conditions and requirements of the Kenai Peninsula Borough Code of Ordinances Chapter 21.18, and any regulations adopted pursuant to this chapter.
12. The permittee is responsible for abiding by all other federal, state, and local laws, regulations, and permitting requirements applicable to the project (KPB 21.18.081 (G)).

Section 4. Pursuant to 21.18.081(D) General Standards, the following standards shall be met before conditional use approval may be granted:

1. The use or structure will not cause significant erosion, sedimentation, damage within the habitat protection district, an increase in ground or surface water pollution, and damage to riparian wetlands and riparian ecosystems; **Conditions 1-3 appear to support this standard.**
2. Granting of the conditional use shall be consistent with the purposes of this chapter, the borough comprehensive plan, other applicable chapters of the borough Code, and other applicable planning documents adopted by the borough; **Findings 1-4, 8-15 appear to support this standard.**
3. The development of the use or structure shall not physically damage the adjoining property; **Finding 8 appears to support this standard.**
4. The proposed use or structure is water-dependent; **Findings 4 and 9 appear to support this standard.**
5. Applicant's or owner's compliance with other borough permits and ordinance requirements. **Finding 15 appears to support this standard.**

THIS CONDITIONAL USE PERMIT EFFECTIVE ON _____ DAY OF_____, 2023.

_____
Jeremy Brantley, Chairperson
Planning Commission

ATTEST:

_____
Ann Shirnberg
Administrative Assistant

Note: An appeal of a decision of the Planning Commission may be filed to the hearing officer, in accordance with the requirements of the KPB Code of Ordinances, Chapter 21.20.250. An appeal must be filed with the Borough Clerk within 15 days of date of the notice of the decision using the proper forms and be accompanied by the filing and records preparation fee.